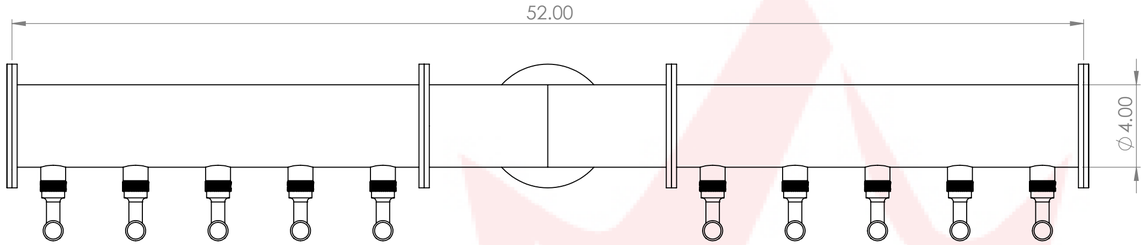

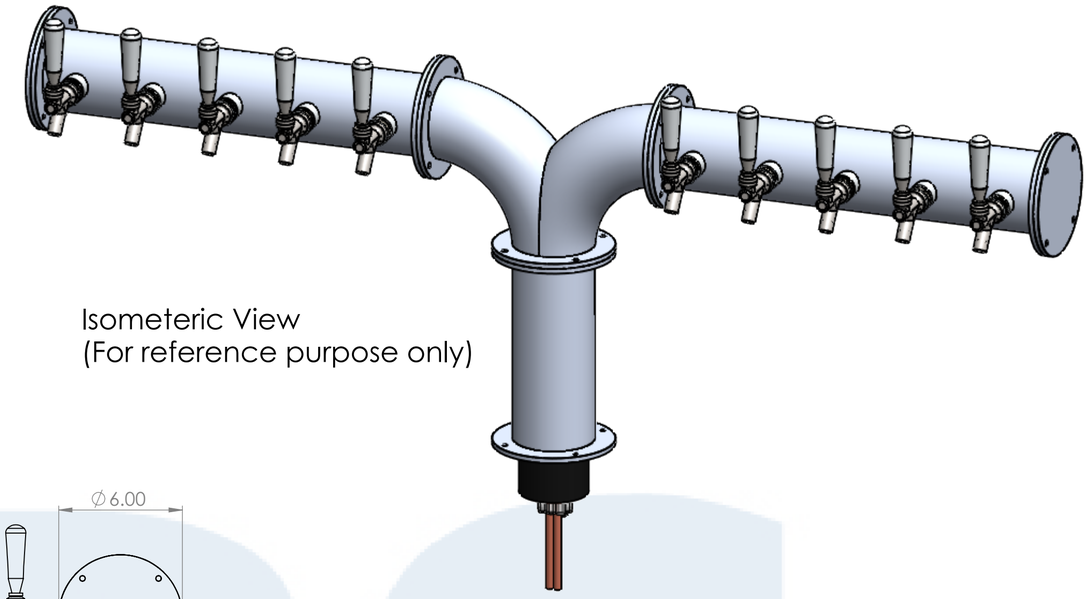

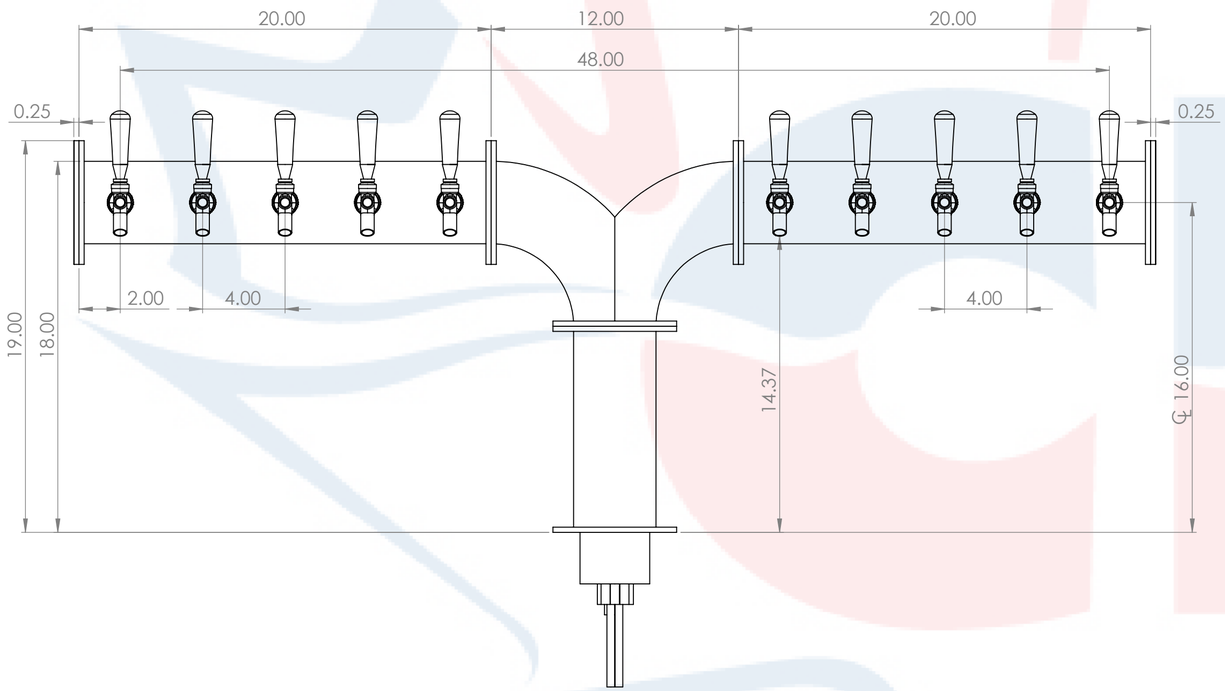

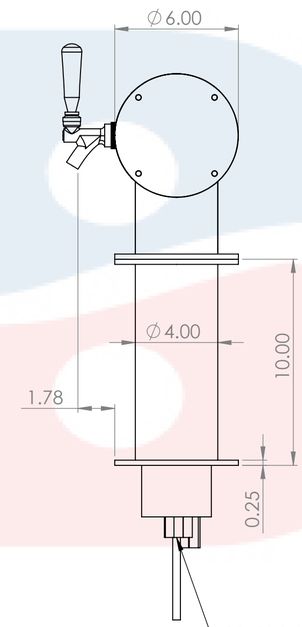

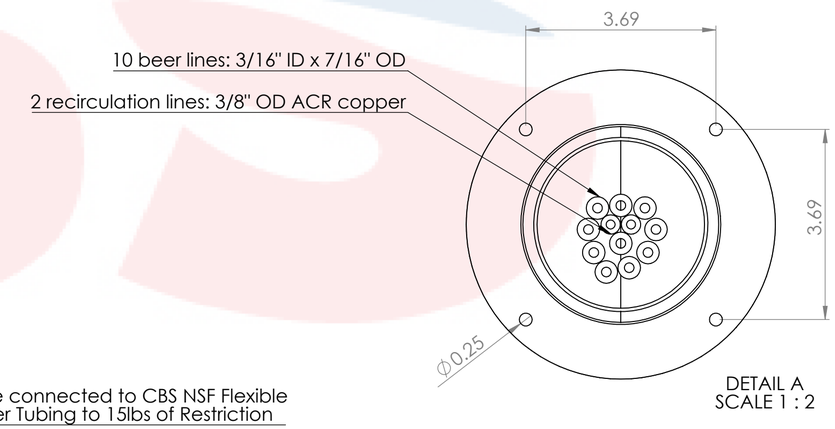

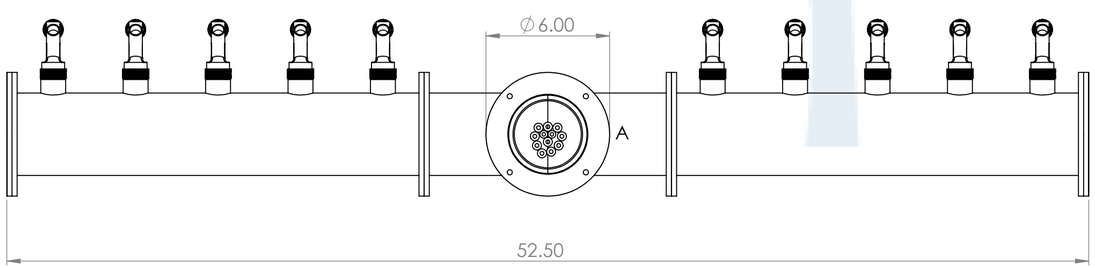

Suggested Drip Tray:
BB701351 - 51" x 7" BSS Drip Tray
BB702451 - 51" x 7" BSS Spray Drip Tray

	Name		Date	Title:
Drawn by:	Canadian Beverage Supply Inc.		12/14/2022	4" 10 Tap Albatross Tower
Approved by:	VP Sales			
Material:	304 SS	Finish:	Brushed SS	Part Number: BB102619-10SSCK / Revision:

Unless otherwise mentioned, dimensions are inches

SCALE: 1:5 SHEET 1 OF 1